DCS = A-10C-II

X-56 Stick & Throttle Bindings

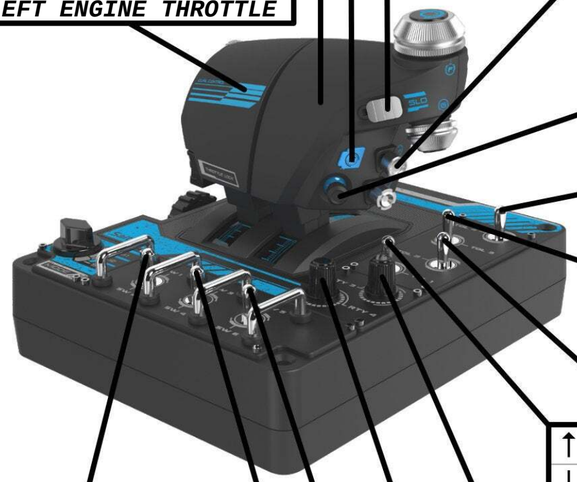

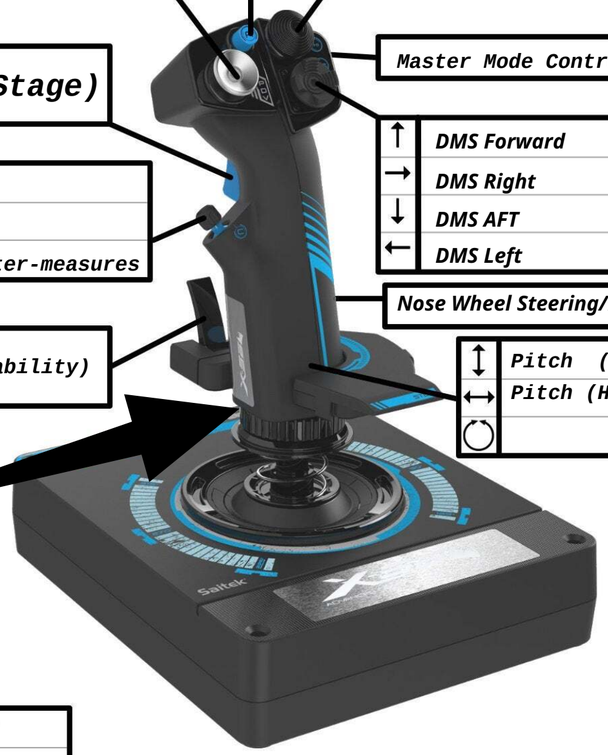

Weapon Release

- ↑ HOTAS (TMS Forward)
- → HOTAS (TMS Right)(TMS RIGHT LONG)
- ↓ HOTAS (TMS AFT)
- ← HOTAS (TMS LEFT) (TMS LEFT LONG)

Target Management SYSTEMS

COOLIE SWITCHES

- ↑ TMS LEFT
- → TMS FOWARD
- ↓ TMS RIGHT
- ← TMS AFT

FUEL DOOR (RE_FUELING)

Auto-Pilot Altitude hold

- ↕ Right Engine Throttle
- ↕ LEFT ENGINE THROTTLE

- ↕ HOTAS SLEW FOWARD/AFT
- ↔ HOTAS SLEW LEFT/RIGHT
- ○

- ↑ Engine START Procedure
- ↓ Engine STOP Procedure

- ↑ Landing Gear UP
- ↓ Landing Gear DWN

- ↑ CANOPY CLOSE (HOLD)
- ↓ CANOPY OPEN (HOLD)

- ↑
- ↓

- ↑ COMMUNICATIONS MENU
- ↓

- ↑
- ↓

- ↑ FLAPS UP
- ↓ FLAPS DWN

○ RADIO COMMUNICATION'S VOLUME

○ COCKPIT LIGHT (GREEN)

Trigger (Second Stage)

- ↕
- ↔
- ○ Click Down Only - Counter-measures

Trigger First Stage (stability)

Twisting STICK L/R
- RUTTER

- ↑ Trim up
- → Role Trim Right
- ↓ Role Trim Aft
- ← Role Trim Left

Master Mode Control

- ↑ DMS Forward
- → DMS Right
- ↓ DMS AFT
- ← DMS Left

Nose Wheel Steering/Laser

- ↕ Pitch (Vertical)
- ↔ Pitch (Horizontal)
- ○

○ ZOOM/OUT IN VIEW (COCKPIT VIEW)
○

WHEEL BREAKS (HOLD)

SPEED BREAKS (HOLD)

○ RADIO CHANNEL NAV
○ CONFIRM (PRESS)

- ↑ COUNTER MESURES FWD
- → COUNTER MESURES RIGHT
- ↓ COUNTER MESURES AFT
- ← COUNTER MESURES LEFT

- ↑
- ↓

- ↑ CHINA SWITCH FOWARD
- ↓ CHINA SWITCH AFT